EN 50131-1
EN 50131-3
EN 50131-6
EN 50131-10
EN 50136-1
EN 50136-2
EN 50130-4
EN 50130-5
CEB T031

PRIME

Anti-intrusion control panels and security systems

Installation manual

inim

Warranty

INIM Electronics s.r.l. (Seller, Our, Us) warrants the original purchaser that this product shall be free from defects in materials and workmanship under normal use for a period of 24 months. As INIM Electronics s.r.l. does not install this product directly, and due to the possibility that it may be used with other equipment not approved by Us; INIM Electronics s.r.l. does not warrant against loss of quality, degradation of performance of this product or actual damage that results from the use of products, parts or other replaceable items (such as consumables) that are neither made nor recommended by INIM Electronics. Seller obligation and liability under this warranty is expressly limited to repairing or replacing, at Seller's option, any product not meeting the specifications. In no event shall INIM Electronics s.r.l. be liable to the purchaser or any other person for any loss or damage whether direct of indirect or consequential or incidental, including without limitation, any damages for lost profits, stolen goods, or claims by any other party caused by defective products or otherwise arising from the incorrect or otherwise improper installation or use of this product.

This warranty applies only to defects in parts and workmanship relating to normal use. It does not cover damage arising from improper maintenance or negligence, damage caused by fire, flood, wind or lightning, vandalism, fair wear and tear.

INIM Electronics s.r.l. shall, at its option, repair or replace any defective products. Improper use, that is, use for purposes other than those mentioned in this manual will void the warranty. Contact Our authorized dealer, or visit our website for further information regarding this warranty.

Limited warranty

INIM Electronics s.r.l. shall not be liable to the purchaser or any other person for damage arising from improper storage, handling or use of this product.

Installation of this Product must be carried out by qualified persons appointed by INIM Electronics. Installation of this Product must be carried out in accordance with Our instructions in the product manual.

Copyright

RED European Directive compliance

Hereby INIM Electronics s.r.l. declares that the following devices are in compliance with the essential requirements and other relevant provisions of Directive 2014/53/UE.

Prime500L, Prime240L, Prime120L, Prime060S, Aria/HG, Joy/MAX, Quadra/P, nBy/S, nBy/X, Alien/GB and variants, Alien/SB and variants, Air2-BS200/50 and variants, Air2-KF100, Air2-MC100B and variants, Air2-MC200B and variants, Air2-UT100, Air2-FD100, Air2-Hedera-F and variants, Air2-Aria/B and Air2-Aria/N, AIR2-XIR200W, AIR2-XDT200W, AIR2-DT200TB and variants, SmartLinkAdv/GP, SmartLinkAdv/G

All the devices mentioned here above can be used in all EU countries without restrictions.

The full declarations of conformity can be found at URL: www.inim.biz

Leading-edge systems (DM37/08)

The devices described in this manual, depending on the settings selected during the installation phase and the implementation of the concepts illustrated in this guide, allow you to create an Intrusion Detection and Hold-up Alarm System (I & HAS) compliant with EN 50131-1:2006 + A1: 2009, safety grade 3 (at highest) and an alarm transmission system (ATS) compliant with EN 50136-1: 2012 in category ATS6 (at highest SP6 or DP4).

The devices described are compliant with European standards EN 50131-3: 2009 (in reference to control and indicating equipment - CIE), EN 50131-6: 2008 + A1: 2014 (in reference to power supplies - PS), EN 50131- 10: 2014 and EN 50136-2: 2013 (in reference to transceivers on supervised sites - SPT).

As a support to the design, planning, operation, installation, commissioning and maintenance of intrusion alarm systems installed in buildings, the following regulatory documents should be consulted: CEI 79-3 and CEI CLC / TS 50131-7.

Depending on the State where the components described are installed, certified compliance with local laws and regulations may be required.

WEEE

Informative notice regarding the disposal of electrical and electronic equipment (applicable in countries with differentiated waste collection systems)

The crossed-out bin symbol on the equipment or on its packaging indicates that the product must be disposed of correctly at the end of its working life and should never be disposed of together with general household waste.

The user, therefore, must take the equipment that has reached the end of its working life to the appropriate civic amenities site designated to the differentiated collection of electrical and electronic waste. As an alternative to the autonomous-management of electrical and electronic waste, you can hand over the equipment you wish to dispose of to a dealer when purchasing new equipment of the same type. You are also entitled to convey for disposal small electronic-waste products with dimensions of less than 25cm to the premises of electronic retail outlets with sales areas of at least 400m2, free of charge and without any obligation to buy.

Appropriate differentiated waste collection for the subsequent recycling of the discarded equipment, its treatment and its environmentally compatible disposal helps to avoid possible negative effects on the environment and on health and favours the re-use and/or recycling of the materials it is made of.

Table of contents

About this manual

DCMIINE0PRIMEE	**MANUAL CODE**
1.51	**REVISION**

Terminology 0-1

Refers to the control panel or any device in the Prime security system.	**CONTROL PANEL, SYSTEM, DEVICE**
Refer to the directions as perceived by the operator when directly in front of the mounted device.	**LEFT, RIGHT, BEHIND, ABOVE, BELOW**
Persons whose training, expertise and knowledge of the products and laws regarding security systems are able to create, in accordance with the requirements of the purchaser, the most suitable solution for the protected premises.	**QUALIFIED PERSONNEL**
Click on a specific element on the interface (drop-down menu, options box, graphic object, etc.).	**SELECT**
Click on/push a video button/key on a keypad or screen.	**PRESS**

Graphic conventions 0-2

The notes contain important information relating to the text.	**Note**
The "Attention" prompts indicate that total or partial disregard of the procedure could damage the device or its peripherals.	**ATTENTION!**
The "DANGER" warnings indicate that total or partial disregard of the procedure could injure the operator and/or persons in the vicinity.	**DANGER!** 

Chapter 1 General information

1-1 Manufacturer's details

Manufacturer: INIM ELECTRONICS s.r.l.
Production plant: Centobuchi, via Dei Lavoratori 10
63076, Monteprandone (AP), Italy
Tel.: +39 0735 705007
Fax: +39 0735 704912
e-mail: info@inim.biz
Web: www.inim.biz

Any persons authorized by the manufacturer to repair or replace the parts of this system have authorization to work only on devices marketed under INIM Electronics trademark.

1-2 Description of the product and various models

DESCRIPTION Intrusion control panel

MODELS Prime060S, Prime060L, Prime120L, Prime240L, Prime500L

APPLIED STANDARDS
EN 50131-1:2006+A1:2009,
EN 50131-3:2009,
EN 50131-6:2008+A1:2014,
EN 50131-10:2014,
EN 50136-1:2012,
EN 50136-2:2013,
EN 50130-4:2011+A1:2014,
EN 50130-5:2011,
CEB T031:2014-12 (ed.1)

SECURITY GRADE 3

ATS CATEGORIES up to SP6 or DP4 (depending on the configurations, refer to tables *2-9* and *2-10*)

1-3 Registered patents

The Prime series of control panels include technology covered by the following patents:

- **Input/Output Terminals**: each terminal on the control panel, on the keypads and expansion boards can be configured as either an input or output zone.
- **nBy/X proximity reader**: this reader has been especially designed to flush-mount to all models of light switch boxes.
- **Learn zone balancing**: this option allows the control panel to save automatically the balancing values of all the system zones, thus eliminating the task of typing them in one by one.

Manuals 1-4

INSTALLATION AND PROGRAMMING GUIDE

This guide, supplied with each control panel, provides all the instructions and illustrations necessary for fast installation and programming of the Prime system.

This leaflet provides a quick guide to first startup, together with the wiring diagrams for the necessary connections, a table for the peripheral addresses, a quick guide to system programming as well as the default values of the programming parameters.

INSTALLATION MANUAL (THIS MANUAL)

The installation manual contains the technical specifications of all the system components and the instructions for their installation, including instructions with wiring diagrams for the various modules.

It also contains the instructions for system commissioning

It is the responsibility of the installer to follow all the manufacturer's instructions in order to ensure proper functioning of the system and, at the same time, to comply with all the warnings relating to the active and passive security of the installation.

PROGRAMMING MANUAL

This manual contains instructions for the configuration and programming of the Prime system, as well as a description of all the system parameters and options, applicable for whatever means used for the programming process (keypad, software, etc.).

It also contains the instructions for system commissioning, maintenance and troubleshooting.

SOFTWARE PROGRAM

The Prime/STUDIO software manual contains the description of the software and the instructions for its installation and use.

It is the responsibility of the person who programs the Prime system to follow the instructions carefully and to ensure they have complete knowledge of the software in order to proceed swiftly and properly with the configuration and programming procedures.

SUPPORT MANUAL

With this manual the manufacturer provides additional information particularly useful for the installer and programmer of the Prime system.

USER'S MANUAL

This manual contains instructions relating to the user interface of the Prime system, its functions and how to use them.

Supplied with each control panel, this manual must be given to the user who must be informed about and have sufficient understanding of all the features of the system and the configuration settings.

Manuals which are not supplied with the apparatus can be ordered, by making reference to their respective codes, or downloaded from www.inim.biz.

Operator Qualifications 1-5

INSTALLER

The installer is the person (or group of persons) who installs and programs the entire security system in accordance with the requirements of the purchaser and the safety laws in force. It is the responsibility of the installer to instruct the user on how to use the security system properly.

Under normal circumstances, the installer is not allowed to arm/disarm the system without previous authorization from the user. All the system partitions must be disarmed before accessing the parameter programming phase.

The access code of the installer is a level 3 access code.

USER

The user or users are the occupants of the premises where the Prime anti-intrusion system is installed. The users can arm and disarm the system or parts of it after valid authentication.

As a result of the extreme flexibility of the system, the most frequent operations can be carried out without prior authorization. This operating method must be expressly requested by the purchaser who must be made aware of the risks that this way of operating entails (false alarms, accidental arm/disarm operations, etc).

Each user is associated with a system access code. The code programming process allows you to define the code hierarchy:

- **User**
- **Manager**
- **Master**
  Depending on its hierarchical level (where "User" is the lowest level), each code can perform the following operations on codes that are hierarchically inferior:
  - enable/disable
  - change PIN
  - change certain programming parameters

If the system programming complies with security grade 3 of EN 50131, some partition arming or delete memory operations, when expressly requested from a keypad, may be authorized by the entry of a level 3 code (installer code) as well as by a user code.

1-6 Access Levels

Specific legislation defines the following levels of access to the control panel, distinct from the limitations of system usability:

- **Level 1** - access by any person (e.g. passer-by)
- **Level 2** - access by a user
- **Level 3** - access by the installer or maintenance operator (expressly authorized by a user with level 2 access)
- **Level 4** - access by the manufacturer

Control panel and peripherals

Chapter 2

Prime control panels 2-1

Package contents 2-1-1

Inside the package you will find:

- Metal enclosure containing the motherboard and wired power supply
- User's Manual
- Quick guide to installation and programming
- Plastic bag containing:
  - 20 x 3k9 Ohm 1/4W resistors
  - 20 x 6k8 Ohm 1/4W resistors
  - Connection wire for the backup battery
  - Eyelet terminal for the connection to earth
  - Nut for the eyelet terminal
  - Thermal probe for optimization of the battery charging process
  - 2 screws to secure the front plate of the metal enclosure
  - screw with 6mm wall plug for the anti-dislodgement device
  - Sticker: "Area protected by INIM Electronics security system"

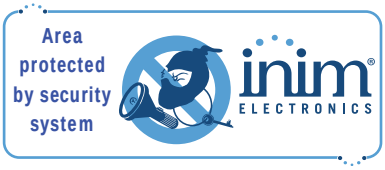

The control panel data labels are affixed to the outside of the control panel enclosures.

Control panel descriptions 2-1-2

Table 2-1: Control panels - electrical and mechanical features

Prime control panel models		Prime060S	Prime060L	Prime120L	Prime240L	Prime500L
Voltage	Power supply	230V ~ -15% +10% 50/60Hz				
	nominal output	13.8V⎓				
	output range	from 9 to 13.8V⎓				
Current absorption	maximum	0.5A		1.1A		
	of the control panel mother-board	180mA @ 13.8V				
Fault voltage on power outputs		9.8V				
Protection tripping volt-age	from deep discharge	9.5V				
	from overload	15.4V				
Maximum power-supply voltage ripple		550mV		200mV		
PS type		A				
Maximum voltage on I-BUS		4A				
Type of alarm notification (EN 50131-1, par. 8.6)		D ([a])				
IP Protection grade		30				
Enclosure Dimensions (W x H x D)		27.5 x 37.4 x 8.6 cm	37.5 x 46.6 x 9.2 cm			
Weight (without battery)		3.2Kg	5Kg			
Security grade	EN50131-3	3				
	EN50131-6	3				

a. Also notification types A, B and C are possible depending on the configuration of the control panel and system.

Table 2-2: Type SD and distribution of currents

Prime control panel models			Prime060S		Prime060L		Prime120L		Prime240L		Prime500L	
SD type (backup battery)	rated voltage		12V									
	maximum capacity		7Ah	9Ah	17Ah	18Ah	17Ah	18Ah	17Ah	18Ah	17Ah	18Ah
	maximum recharge time		24h (80% charged)									
	maximum internal resistor ($R_{i\ max}$)		1.50Ohm		0.50Ohm							
Maximum deliverable current @ 12V	total		3.7A		6.2A							
	for external loads	autonomy 30h ([a])	50mA	120mA	380mA	420mA	380mA	420mA	380mA	420mA	380mA	420mA
		autonomy 12h ([b])	400mA	570mA	1230mA	1320mA	1230mA	1320mA	1230mA	1320mA	1230mA	1320mA
		autonomy 4h ([c])	1570mA	2070mA	4070mA	4320mA	4070mA	4320mA	4070mA	4320mA	4070mA	4320mA
Max. current available on each +AUX terminal			1500mA									
Maximum deliverable current to open-collector outputs		T1, .., T10	250mA									
		OC1, OC2	500mA									

a. The system autonomy in absence of the primary power source can be limited to 30h for systems with security grade 3 or 4, that is, as long as the primary power source failure is notified to an alarm receiving centre or to another remote control panel.
b. If the system is declassified to grade 2, autonomy can be limited to 12h.
c. For type A or B power supplies, if the system includes an ancillary power supply that switches automatically between the primary power source and the ancillary power-supply, the autonomy can be limited to 4h regardless of the system security grade.

The following table shows the maximum number of devices supported by the various control panel models.

Table 2-3: Control panel - main features

Prime control panel models	Prime060S	Prime060L	Prime120L	Prime240L	Prime500L
Partitions	10		20	30	
Total zones	120		240	480	1000
Keypads	10		15		30
Voice memo slots	10				
Expansions	100				
Readers	20		30		60
Sounders/flashers	10				
Wireless transceiver	20		30		
Electronic keys and wireless remote controls	150				500
Possible key combinations	4294967296				
Isolators	16				
GSM, GPRS, UMTS, HSPA and LTE communicator	1				
Temperature probes	15				
Home-automation modules	30				
Wi-Fi boards	1				
Codes	50		100		500
Scenarios	30			50	
Timers	20			40	
Recordable events	4000				
Programmable events	30		50	60	

Table 2-4: Number of terminals

Prime control panel models		Prime060S	Prime060L	Prime120L	Prime240L	Prime500L
Terminals on panel	total	10				
	configurable as inputs	10				
	configurable as roller shutter/shock	10				
	configurable as outputs	10				
Wireless terminals		60		120	195	195
terminals on keypads		20		30		60

Table 2-4: Number of terminals

Prime control panel models		Prime060S	Prime060L	Prime120L	Prime240L	Prime500L
terminals on expansion boards	total	500				
	available	60		120	240	500
Virtual terminals		15				
Total terminals		60		120	240	500
Outputs on control-panel motherboard	total	15				
	terminals (T1, ..., T10)	10				
	relay	1				
	open collector (OC1, OC2)	2				
	Auxiliary outputs (AUX1, AUX2)	2				

Following is an illustration of Prime control panels when open showing their assembled parts and completed wiring, as supplied.

ATTENTION!

Do not tamper with or disconnect any wiring that has been completed at the factory.
In the event of the necessary replacement by the installer of one of the parts indicated below (for maintenance or repairs), the manufacturer recommends that connection or disconnection of any wires is done only after disconnecting both the AC mains voltage and the battery.

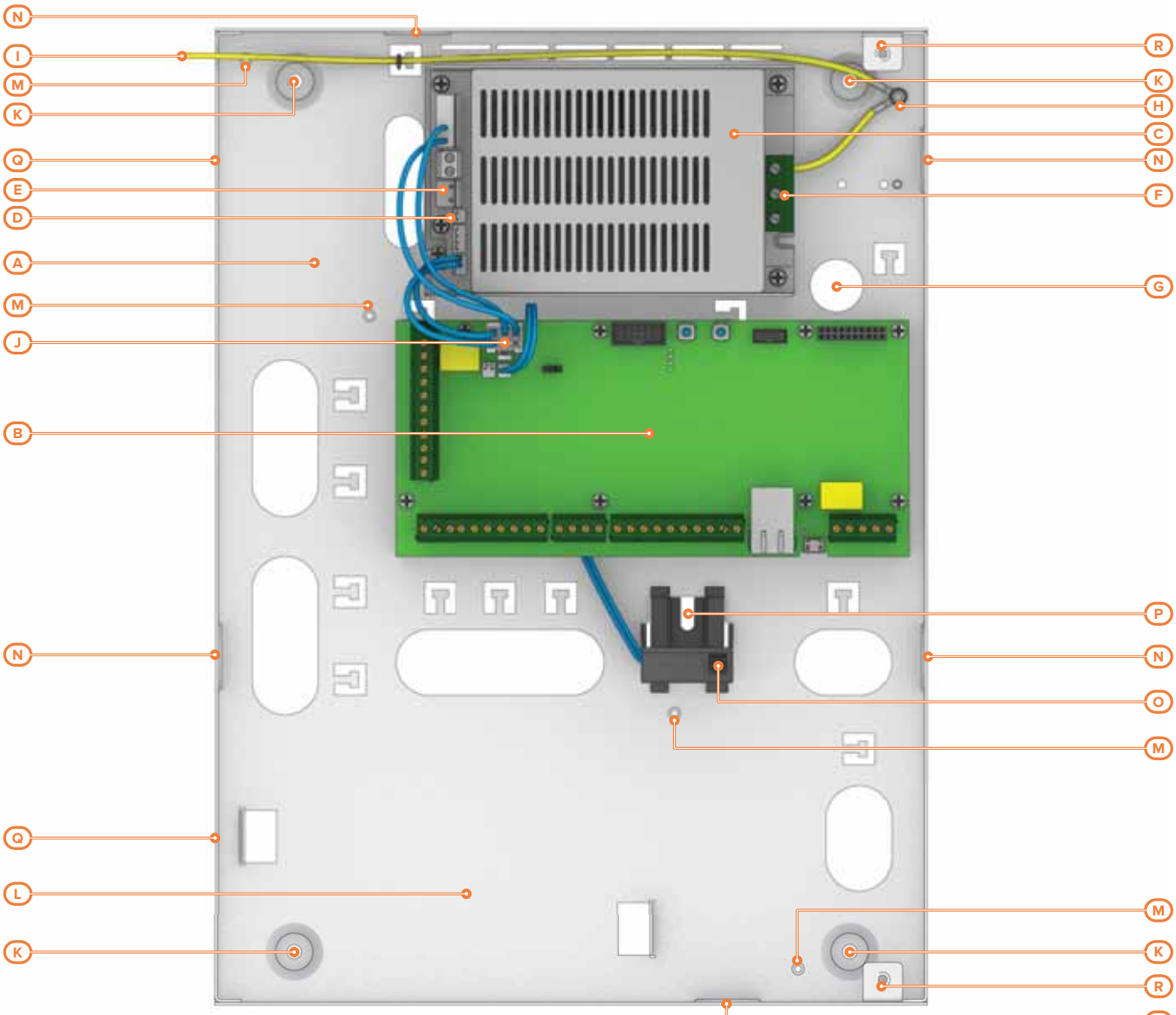

Prime060S

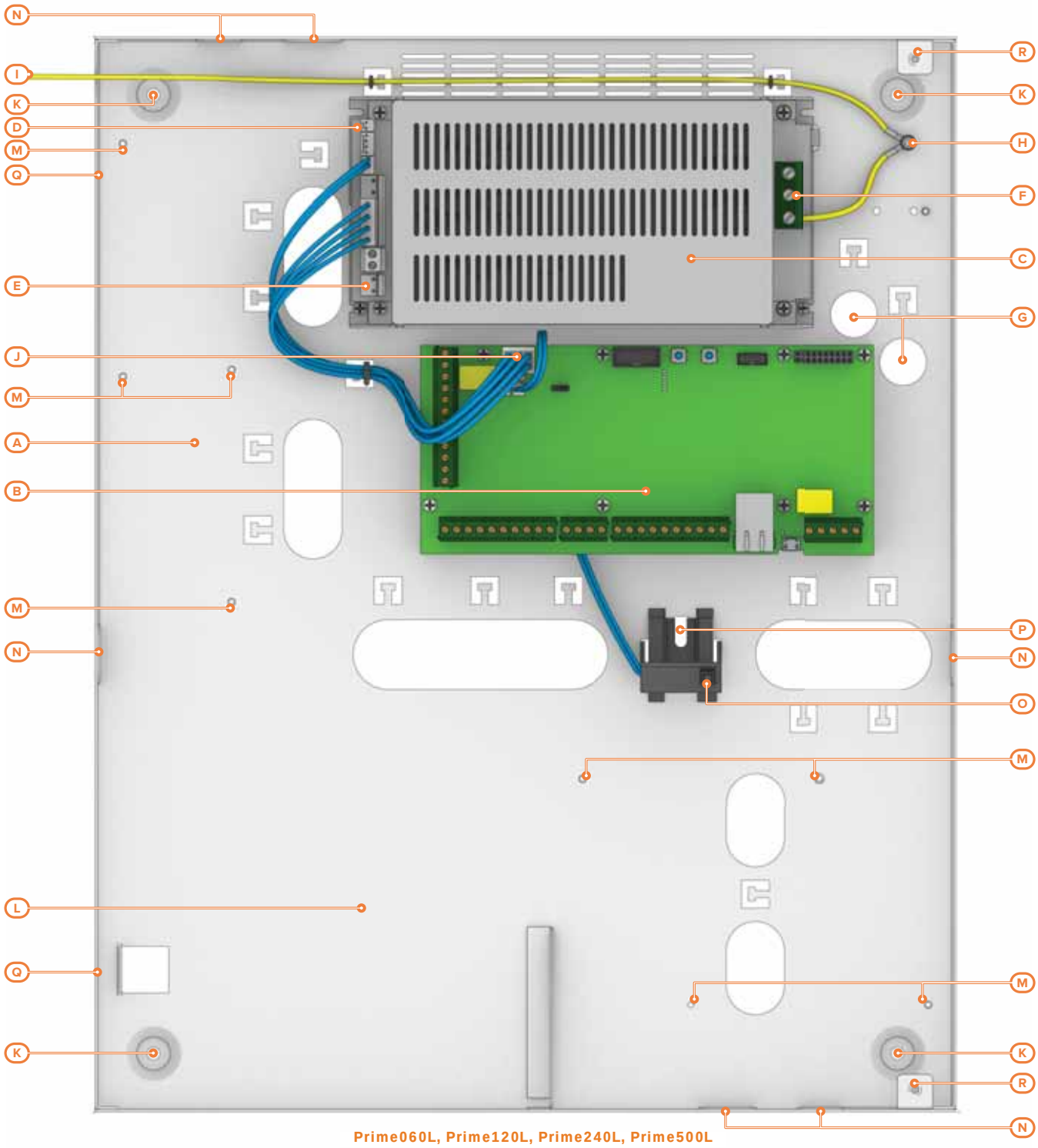

Prime060L, Prime120L, Prime240L, Prime500L

Table 2-5: Control panels - description of parts

Models Prime	Prime060S	Prime060L, Prime120L, Prime240L, Prime500L
A	Back plate of the metal enclosure	
B	Mother board	
C	Switching power supply	
D	Thermal probe connector	
E	Battery connector	
F	AC Input 230V ~ 50/60 Hz L N ⏚ Mains input terminal board	AC Input 230V ~ 50/60 Hz ⏚ N L
G	Mains cable entry	

Table 2-5: Control panels - description of parts

Models Prime	Prime060S	Prime060L, Prime120L, Prime240L, Prime500L
H	Earth connection screw	
I	Earth wire for front plate	
J	Wires between switching-power supply and control panel	
K	Mounting holes for the metal enclosure	
L	Compartment for backup battery	
M	Mounting holes for expansion board or Nexus	
N	Lateral cable entries (on the sides of the enclosure)	
O	Anti-tamper device	
P	Mounting hole for anti-tamper device	
Q	Slots for the front plate of metal enclosure	
R	Mounting holes for the front plate of metal enclosure	

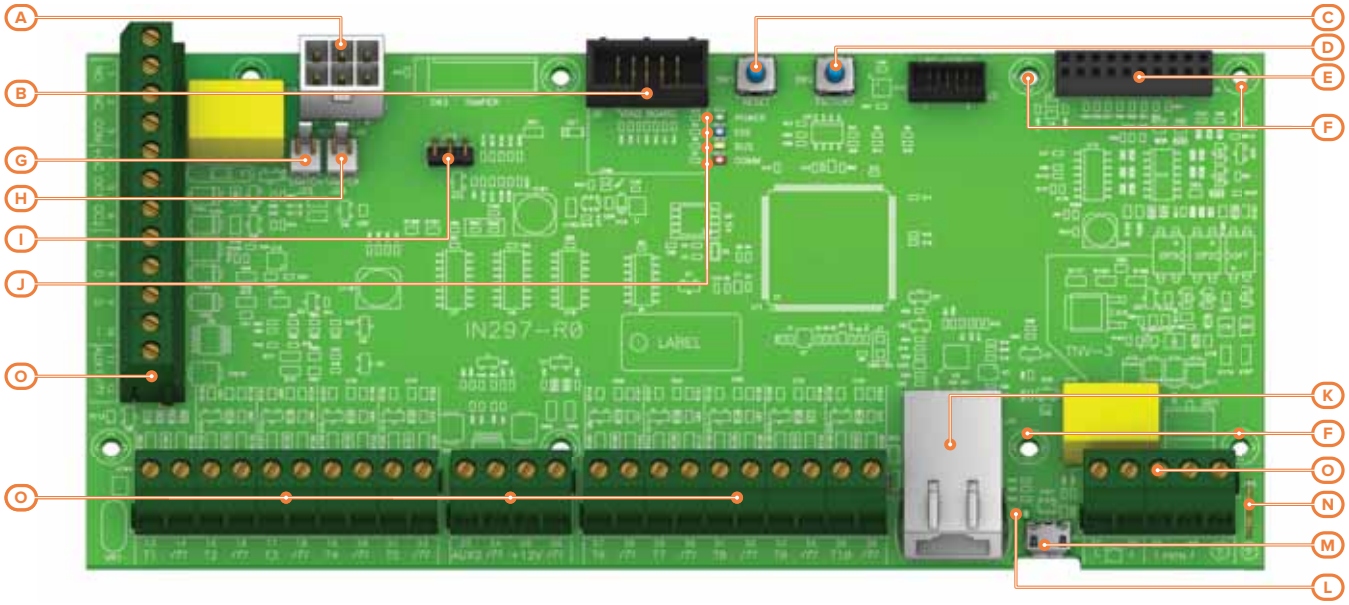

Table 2-6: Mother board - description of parts

A	Connectors for wires between power supply and board	
B	Connector for SmartLogos30M voice-board	
C	RESET	System reset button
D	FACTORY	Button to reset default settings (factory settings)
E	Connector for optional board	
F	Mounting holes for optional board	
G	Connector for optional anti-tamper device	
H	Connector for anti-tamper device (supplied)	
I	Connectors for Maintenance jumper	
J	POWER	Green power LED
	EXE	Blue activity LED
	BUS	Yellow BUS activity LED
	COMM	Red PSTN line activity LED
K	RJ45 connector for LAN network	
L	Green USB connected LED	
M	Connector for MicroUSB	
N	Ancillary earth contact	
O	Terminal board	

Table 2-7: Mother board - terminal board

n.	icon / identifier	function
1-2-3	NO NC COM	Voltage-free contacts of relay output
4	+OC	13.8V⎓ 350mA ancillary power supply
5-6	OC1 OC2	Open-collector outputs
7-8-9-10	+ D S -	I-BUS connection
11-23	AUX1 AUX2	13.8V output terminals⎓
25	+12V	13.8V⎓ 350mA protected ancillary power supply
12-14-16-18-20-22-24-26-28-30-32-34-36	⏚	Power supply negative (earth or GND)
13-15-17-19-21-27-29-31-33-35	T1-T2-T3-T4-T5-T6-T7-T8-T9-T10	Control panel input/output terminals
37-38	☎	Internal telephone-line connection
39-40	PSTN	Land-line connection (PSTN)
/	⏚	Earth connection

Table 2-8: EN IEC 62368-1

Insulation class	I	
Type of terminals	AC input	ES3, PS3
	BAT-, BAT+	ES1, PS2
	+ D S -	ES1, PS2
	AUXn, +12V	ES1, PS2
	NO, NC, COM	ES1, PS2
	Tn, OCn	ES1, PS1
	OUTn (Flex5/R, Flex2R/2T)	ES3, PS3
	Cn, NOn, NCn (AUXREL32)	ES1, PS2
	☎, PSTN	ES2, PS1
	RS232	ES1, PS1
	Ethernet (PrimeLAN)	ES1, PS1
	USB	ES1, PS1
	ANT (Nexus, PrimeWiFi)	ES1, PS1

2-1-3 LED activity

The LEDs on the control panel motherboard (refer to *Table 2-6: Mother board - description of parts, J*) can providing useful information regarding the proper operating capacity of the control panel and I-BUS. Specifically:

GREEN POWER LED

Green LED ON solid indicates the presence of electrical power. If ON solid it indicates that the control panel is operating properly. LED OFF or blinking indicates power failure or the presence of trouble. The control panel will continue to operate until the battery disconnection threshold for deep discharge is reached (9.5V).

BLUE EXE LED

During normal operation of the control panel, the blue LED will blink rapidly. On exiting the installer menu at the end of a programming session via PC, during reset of factory default settings and during reprogramming operations on the control panel and peripheral firmware, this LED may be either ON solid or OFF for the entire duration of the operation in progress. However, once the operation has been completed it should start blinking as previously described.

If the LED is ON or OFF permanently in situations other than those previously described, it indicates that all the functions of the control panel are blocked.

YELLOW BUS LED

During normal operation of the control panel and if the system has at least one peripheral on the I-BUS, the yellow LED will flicker. On exiting the installer menu at the end of a programming session via PC, during reset of factory default settings and during reprogramming operations on the control panel and peripheral firmware, this LED may be either ON solid or OFF for the entire duration of the operation in progress. However, once the operation has been completed it should start blinking as previously described.

If the system is completely without peripherals on the I-BUS, the yellow LED will be either ON or OFF permanently.

If the LED is ON or OFF permanently in situations other than those previously described, it indicates that the I-BUS is blocked. This condition can be confirmed by checking the loss of interactivity with readers, expansions or keypads.

RED COMM LED

The Red LED ON solid indicates an ongoing:

- phone call (on the PSTN line or through Nexus)
- sending of SMS text message
- SIA-IP communication

ATS Categories 2-1-4

Prime control panels used alone or together with any of the following described optional devices constitute an SPT (Supervised Premises Transceiver) which can be used to create an ATS (Alarm transmission System) as defined in EN 50136-1 and EN 50136-2 standards.

The maximum ATS categories achievable with SPT configurations and the main communication channel used together with the respective parameters are shown in the following tables.

Table 2-9: ATS categories based on configurations

SPT Configurations					SPT primary network interface	ATS Categories	
Prime control panels	Nexus	Nexus/G - 3G-4G	PrimeLAN	PrimeWiFi		Single Path (SP)	Dual Path (DP)
X					Internet	6	2
X	X						
X	X			X			
X		X			Internet or GSM/GPRS/UMTS/HSPA	6	4
X			X				
X		X	X				
X		X		X			

Table 2-10: ATS Parameters

ATS Categories		Transmission time		Time relation	Replacement security	Information security	Operating mode
		Classification	Maximum values				
Single Path	2	D2 (60s)	M2 (120s)	T2 (25h)	S0	I0	Pass-through
	6	D4 (10s)	M4 (20s)	T6 (20s)	S2	I3	
Dual Path	2	D3 (20s)	M3 (60s)	T3a (30min)	S0	I0	
	4	D4 (10s)	M4 (20s)	T5 (90s)	S2	I3	

Events log memory 2-1-5

The control panel events are saved to a non-volatile semiconductor-memory which does not need to be powered to ensure data retention.

The electrical characteristics of semiconductor devices diminish over time. However, a minimum period of 40 years data retention is guaranteed.

I-BUS interconnections 2-1-6

Prime control panels are equipped with a 4-wire BUS for peripheral interconnections (2 power-supply wires and 2 data exchange wires, refer to *paragraph 3-2-1 Connecting to the I-BUS line*).

The intellectual property rights regarding the electrical, structural and protocol features of the BUS are the sole property of INIM Electronics s.r.l.

The I-BUS is not a RS485 differential BUS.

COMMUNICATION I-BUS

The control panel monitors continuously the traffic on the I-BUS line.

```
  - JOY/MAX -
FW RELEASE  X.YZ
NO COMMUNICATION
K01 P14
```

If no signals (control panel and peripheral signals) are detected on the I-BUS for over 90 seconds, the keypad screens will show the warning opposite. The screen will show:

1. keypad model
2. keypad firmware version
3. error type
4. the number of the keypad and the number of the integrated reader

In this case, the installer must first check that cable "D" of the I-BUS is connected properly. Then check the proper operating capacity of the I-BUS and the general integrity of the entire system.

```
  - JOY/MAX -
FW RELEASE  X.YZ
NOT ENROLLED
K01 P14
```

If the message opposite appears on the keypad screen, it means that I-BUS is operating properly but cannot communicate with the keypad in question.

This indicates that the keypad is not present in the system configuration.

Note

One of the two messages shown above may also appear during control panel firmware updates.

If you are using an Alien keypad, the above-mentioned information will be shown on bar at the bottom of the home page.

2-2 Environmental Conditions

Prime control panels must not be installed outdoors and operate properly under the following conditions:

- **Temperature**: from -10° to +40°C
- **Maximum humidity**:75% (without condensation)
- **Environmental class**:II

The peripherals must not be installed outdoors and operate properly under the following conditions:

- **Temperature**: from -10° to +40°C
- **Maximum humidity**:75% (without condensation)
- **Environmental class**:II

The nBy/S reader is suitable for outdoor installation and operates best under the following conditions:

- **Temperature**: from -25° to +70°C
- **Maximum humidity**:93% (without condensation; for 30 days per year granting that the relative humidity can touch points of 95% without being subject to condensation)
- **Protection grade**:IP 34
- **Environmental class**:IV

2-3 Peripherals

The Prime anti-intrusion system provides for the use of devices connectible to the control panel via I-BUS:

- keypads (Joy, Aria/HG, nCode/G, Concept/G, Alien)
- readers (nBy)
- expansions (Flex5)
- transceivers (Air2-BS200)
- sounders/flashers (Ivy-B)
- 2G/3G/4G communicators (Nexus)
- isolators (IB200)
- heat sensors
- home-automation modules

ATTENTION!

The connectible peripherals must have firmware versions higher than or equal to 5.00.

SmartLogos30M voice memory board 2-4

The SmartLogos30M is an optional board that is necessary if voice functions are required on the control panel:

- Voice mailbox, to record, play and delete voice messages.
- Voice dialer, to send voice calls to programmed contact numbers.
- Answerphone, to answer incoming calls.
  After a pre-set number of rings, the control panel will engage the telephone line and play a voice message. During the call, the recipient can type-in a valid user code PIN and access the functions enabled for the code.

The SmartLogos30M voice board provides 500 voice message slots, 310 of which are pre-recorded at factory. The messages are arranged in such a way as to produce event-related voice calls which clearly describe the event.

Chapter 3 Installation

3-1 Installing the control panel

3-1-1 Wall mounting

The control panel should be installed in a place that is out of sight and that does not allow easy access to outsiders.

1. Open the metal enclosure of the control panel by removing the front plate.
2. Note the mounting holes in the corners on the metal back plate of the control panel enclosure (*Table 2-5: Control panels - description of parts, K*) as well as the hole for the anti-tamper device (*Table 2-5: Control panels - description of parts, P*).
3. Using the metal enclosure, mark the mounting holes on the wall. Drill the holes taking care not to drill in the vicinity of electrical wiring, plumbing or gas pipes, etc.
4. Insert the 6mm wall plug (supplied) into the hole for the anti-tamper device.
5. Insert a wall plug into each of the other holes (recommended diameter 6mm).
6. Pull the cables through the cable entry.
7. Using the wall plugs, attach the enclosure to the wall.
8. Replace the front plate of the metal enclosure.

Note

The cable gland must be flame class rating V-1 or higher.

3-1-2 Connecting the Mains power supply

The control panel must be powered through a separate line coming from the mains box. The line must be protected by a safety-standards compliant circuit breaker (trip switch).

The circuit breaker (trip switch) must be positioned externally to the apparatus and should be easily accessible. The distance between contacts must be at least 3mm. The manufacturer strongly advises the use of a magnetothermic switch with C intervention curve and maximum nominal current - 16A.

The electrical earthing system of the site must be compliant with all safety standards and laws in force.

DANGER!

Ensure that the Mains is switched Off during the mains connection phase. Danger of electric shock.

1. Pull the power-supply cables through the cable entry [*A*].
2. Connect the mains power supply to the appropriate terminals [B] (*Table 2-5: Control panels - description of parts, F*).
   Follow the indications on the label [*C*] located near the mains terminal board.
   For a safety standard compliant installation the phase wire must be connected to the "L" terminal and the neutral wire to the "N" terminal.
3. Ensure that low voltage security wires or signal wires do not come into contact with dangerous voltage points.
   Using a cable tie, bunch the wires together and connect them firmly to one of the cable hooks on the back of the enclosure.

Note

The end of a stranded wire must not be consolidated with soft soldering in points where the wire is subjected to contact pressure.

4. Crimp the earth wire to the eyelet terminal *[E]* (included).
5. Using the nut (supplied) attach the wire with the eyelet terminal to the earthing screw *[F]* (*Table 2-5: Control panels - description of parts, H*) of the control panel.
6. Ensure that terminal "⏚" of the power supply module *[G]* and the front plate *[H]* are connected to earth.

The installation must be carried out in accordance with the national regulations governing installations and the power source to be switched to the output must be provided through a bipolar protection device. The wire used for wiring of the product must have an adequate section and comply with the IEC 60332-1-2 or IEC 60332-2-2 standards.

Note

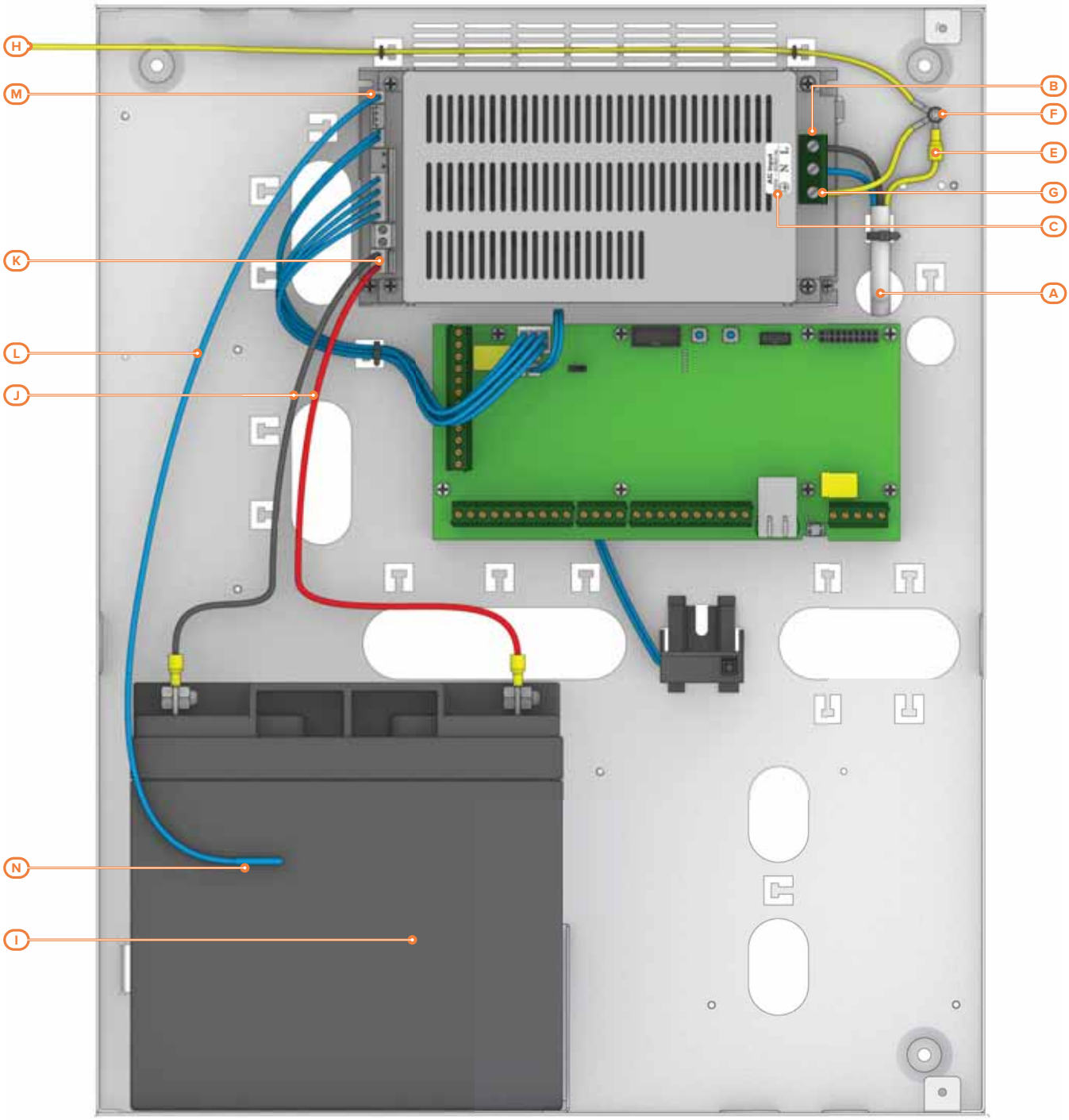

Prime060L, Prime120L, Prime240L, Prime500L

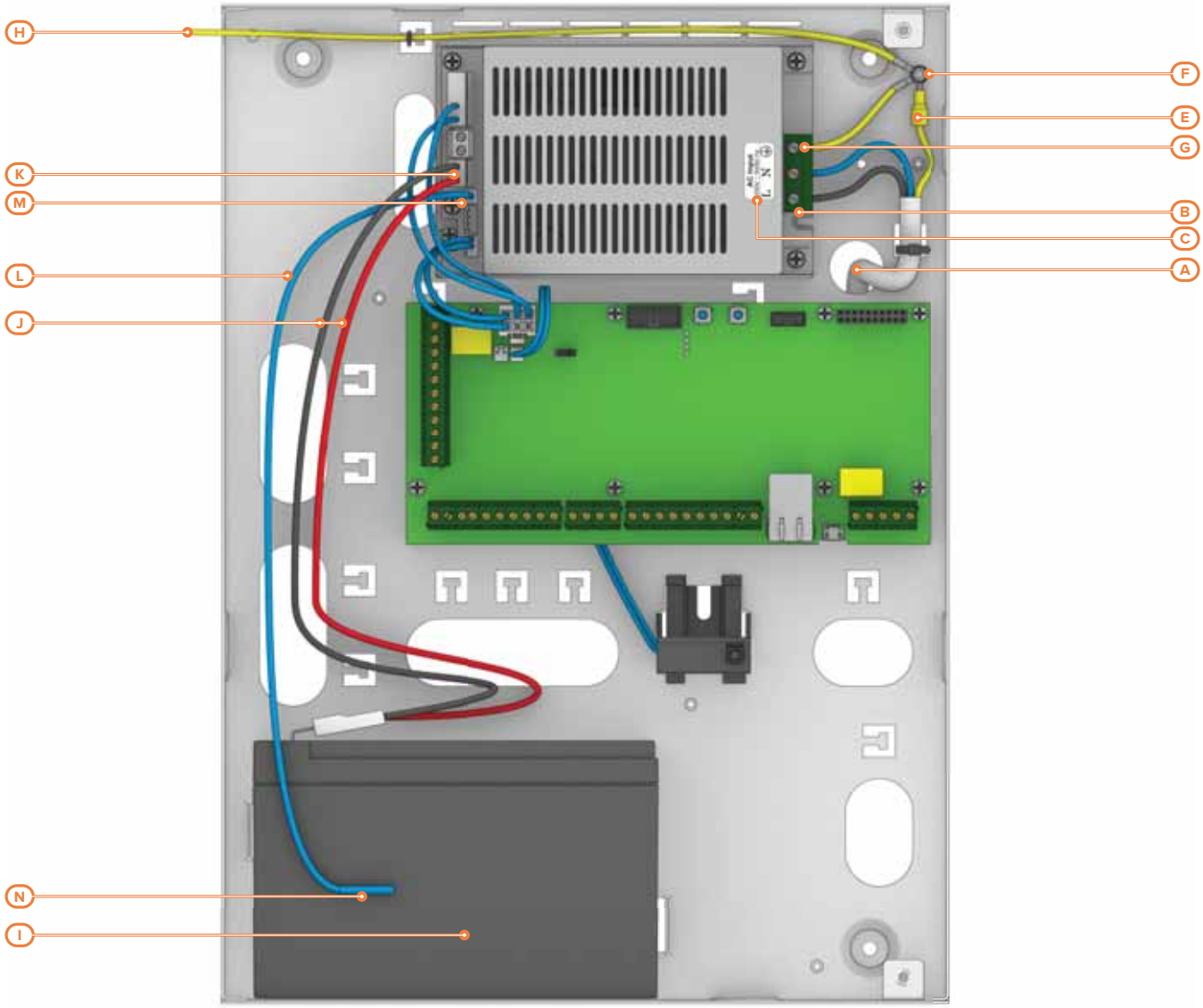

Prime060S

3-1-3 Connecting the backup battery

Connection of the backup battery *[I]* must be carried out during the phase described in *Chapter 4, First power up*.

The metal enclosure of the Prime060S is capable of housing one lead battery @12V 7Ah or 9Ah.

The metal enclosure of the Prime060L, Prime120L, Prime240L and Prime500L is capable of housing one lead battery @ 12V 17Ah 12V 17Ah.

Note

The battery casing must have HB flame rating or higher.
The backup batteries for the power supply of the product are not supplied with the same.
The installer must use valve regulated lead-acid batteries (VRLA) for stationary use, compliant with IEC 60896-21 and IEC 60896-22 standards.

For the connection of the battery use the connection wire [J] supplied with the control panel.

ATTENTION!

Ensure that the polarity of the battery is respected:
- black wire = negative
- red wire = positive

Connect the cable to the control panel using the appropriate connector *[K]* on the switching power supply *Table 2-5: Control panels - description of parts, E*).

The lead battery is the secondary power source which powers the system when the primary (mains) power source fails (230V 50Hz).

Once powered up, the panel will charge and monitor the batteries automatically. The control panel tests the efficiency of the batteries by simulating load current demand at regular 4 minute intervals. If the control panel detects a voltage inferior to 10.4V (battery inefficient), it will generate an "Low Battery" event that will not clear until the voltage restores to over 11.4V.

In this case the yellow LED on the keypad will light up. To view the fault event, work through the following steps:

User menu, View , Faults

Thermal probe 3-1-4

A thermal probe *[L]* is available for compensation of the battery charge voltage based on the battery temperature. The thermal probe protects against battery overheating and consequent permanent damage to the battery.

To connect the thermal probe, work through the following steps:

1. Disconnect the battery.
2. Connect the thermal probe to the connector on the power supply *[M]* (*Table 2-5: Control panels - description of parts, D*).
3. Attach the thermal probe to the battery *[N]*, in such a way as to provide optimized heat-transfer measurements.

Opening and closing the control panel 3-1-5

To gain access to the control panel, it is necessary to remove the front plate of the metal enclosure and proceed as follows:

1. Type-in the installer code on a keypad and press **OK**. Access to the installer menu will inhibit the activation of the output and any report calls associated with the "Open-panel" event.
2. Remove the 2 screws and the metal front plate.
3. Insert the Maintenance jumper (refer to *paragraph 3-1-9 Maintenance status*) and carry out the necessary work.

Once maintenance has been completed, work carefully through the following steps.

1. Remove the Maintenance jumper.
2. Using the 2 screws, secure the front plate in place.
3. Exit the Installer menu.

Note

If you exit the Installer menu before replacing the front plate, the control panel will not generate an "Open-panel" event immediately.
However, the system will generate an open-panel event, if the front plate is not replaced within 15 seconds of closing the open-tamper microswitch.

Connecting the Land-line (PSTN) 3-1-6

Connect the land line (PSTN) to terminals 39 and 40 on the control panel motherboard (*Table 2-7: Mother board - terminal board, 39-40*).

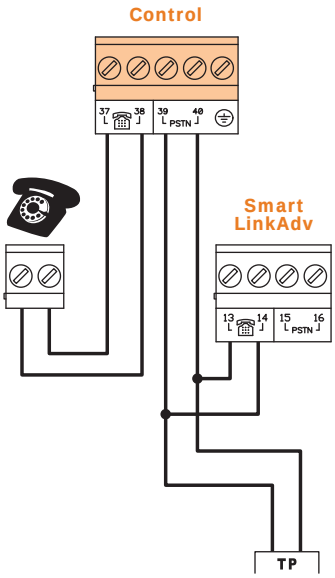

If you are installing the control panel in a place where the land line (PSTN) service is not available, or if you wish to increase the level of security of the system, these terminals also accept a GSM interface (such as SmartLinkAdv) which simulates the analogue land-line.

SmartLinkAdv is a telephone dialer manufactured by INIM Electronics and is available in two versions, model G and model GP. Both devices monitor the analogue land line and in the event of line-down conditions (e.g. wire-cutting) simulate the analogue land line and allow the control panel to switch incoming/outgoing calls to the GSM network.

You can also use the terminals on the SmartLinkAdv board to extend the functions provided by the Prime system. Following are several examples:

- Arming/Disarming the system over-the-phone using a cost-free call or SMS text
  By connecting one of the Prime board terminals programmed as "follow zone" to an output on the SmartLinkAdv board, it will be possible to arm or disarm the Prime system via SMS text.
  In a similar way, using a terminal programmed as a "switching zone", it will be possible to arm or disarm the control panel simply by means of a recognized incoming call.
- Receive an SMS text in the event of Control panel alarm
  By connecting one of the Prime control panel alarm outputs to a SmartLinkAdv input, it will be possible to receive alarm communications via SMS text. The SMS text, which is programmable, can be automatically forwarded to ten different contact numbers.

All the functions of the Prime system which use the PSTN line (voice dialer, answerphone, alarm receiving centre and teleservice) can be managed completely over the GSM network by

the SmartLinkAdv. Of particular interest is the possibility of carrying out teleservice maintenance also through the GSM network.

Note

If an ADSL line is present, it is necessary to connect the control panel downstream of the ADSL filter on the line dedicated to telephone equipment (this line is clearly indicated on the filters).

If the control panel is not equipped with a SmartLogos30M voice board, voice calls will produce a continuous beep for 30 seconds.

3-1-7 PC Link

The link with the control panel is required during writing on the control panel and reading from control panel. This can be achieved in various ways:

- **USB**: this is a direct connection with the control panel via the USB port.
  The link functionality depends on the installation of the drivers for communication via USB. These are available in the folder: C:\Program Files (x86)\Inim\Prime\drivers\USB
- **LAN and WiFi networks**,this type of link is obtained via the network modules of the Prime control panel:
  - LAN card integrated in the control panel for the connection to Ethernet networks
  - **PrimeLAN**, optional board for connections to Ethernet networks
  - **PrimeWiFI**, optional board for Wi-Fi connection

Communication functionality is subject to the configuration of the network itself. It is strongly recommends that you contact the network administrator for the correct configuration.

- **Inim Cloud**: the connection of control panels to the Cloud service is achieved via LAN or GSM with no need to make configurations in the network on which the control panel is deployed. In particular, it is not necessary to program a router to perform port-forwarding and the like in order to reach the control panel. No network programming is required on the network boards, since these boards are programmed by default with the DHCP enabled (option that allows the automatic assigning of an IP address to the devices on the network). The type of connection available can be configured through the "Settings, Communication ports" section of the menu, "Communication type" tab.

For details regarding the connection, refer to the Prime/STUDIO software manual.

3-1-8 Connecting the SmartLogos30M board

For proper installation of the board, work carefully through the following steps.

1. Completely shutdown all power to the control panel by disconnecting the primary power source and the lead battery.
2. Insert the board into the appropriate connector (*Table 2-6: Mother board - description of parts, B*).
3. Power up the system from the mains and reconnect the lead batteries.

3-1-9 Maintenance status

Maintenance status is signalled on the first line of keypad displays by the word "Maintenance" and the keypad address. In the case of a keypad with an enabled integrated proximity reader, the reader address will also be shown.

During maintenance mode, the control panel:

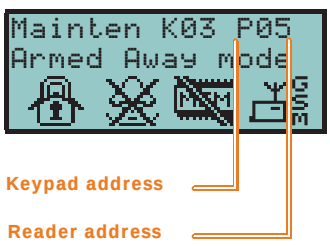

- Forces the relay output on the motherboard (*Table 2-7: Mother board - terminal board, 1-2-3*) to stand-by status.
- Does not activate the outputs (and will force any active outputs to stand-by status) triggered by:
  - alarm or zone/partition tamper
  - peripheral tamper
  - open/dislodged panel tamper
- It allows initialization of the keypad address programming phase.
- It allows initialization of the reader address programming phase.
- It initializes automatically the auto-enrolling process of the peripherals connected to the BUS at 10 seconds intervals. The installer programs the addresses of the peripherals connected to the BUS and, at 10 second intervals, the control panel enrolls in the configuration the peripherals it finds.
- If there are any lost devices, the BUS will not be reset repeatedly in an attempt to retrieve them.
- It continues, except for the points mentioned above, to be operational in all of its functions.

During maintenance mode, the Alien keypad:

- Does not require user-code entry to access the sections which correspond to the "Settings" button.
- The first parameters shown in the "Settings - Alien" section are the addresses of the Alien keypad and its integrated proximity reader and, only for the Alien/S, the status of tamper enablement on the keypad.
- It is not possible to access the "Climate" section.
- The display shows the address of the Alien keypad and its integrated proximity reader in the top left-hand corner of the home page.
- The display shows the characters relating to the operating status of the partitions in the bottom left-hand corner of the home page.

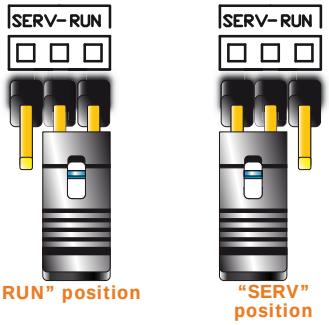

The control panel can be placed in maintenance mode by:

- Inserting the Maintenance jumper in the "SERV" position.
- Enabling the "Maintenance" option

USING THE MAINTENANCE JUMPER

The Maintenance jumper (*Table 2-6: Mother board - description of parts, I*) can be inserted in two different positions:

- "RUN" - control panel operating normally
- "SERV" - control panel ready for maintenance work

THE "MAINTENANCE" OPTION

The control panel enters "Maintenance" mode when this option is enabled and exits "Maintenance" mode when it is disabled. You can enable/disable this option at the keypad or via computer.

Via keypad

1. Access the "Programming Panel options" section.

`Type-in Code (Installer PIN) , PROGRAMMING Panel options`

2. Press [*] to enable the "Maintenance" option, or [#] to disable it.
3. Press **OK** to exit and save.

Via software

This option is made available by clicking on the **Control panel parameters** button in the section on the left. The "Control panel parameters" section provides the "Maintenance" option, click on this option to enable/disable it.

Installing peripherals 3-2

Connecting to the I-BUS line 3-2-1

The peripheral devices of the Prime system must be connected to the control panel via the I-BUS.

The connection between the control panel and its peripherals is achieved through a shielded 4 wire (or more) cable.

ATTENTION!

The shield must be connected to one of the terminals ⏚ (Negative or GND) at the control panel end only, and must run along the BUS without being connected to negative or GND at any other point.

The control panel connection is done using terminals "**+ D S -**" on the motherboard (*Table 2-7: Mother board - terminal board, 7-8-9-10*).

SIZING

The sizing of the I-BUS line, i.e. the distribution of peripherals and the use of cables to connect them, must be done on the basis of various project factors, in order to ensure the diffusion of the signals of conductors "**D**" and "**S**" and the power supplied by conductors "**+**" and "**-**".

The factors are:

- The current absorption of the connected devices.
  In the case of insufficient power supply from the BUS line to peripherals and detectors, this can also be supplied by external power supplies.

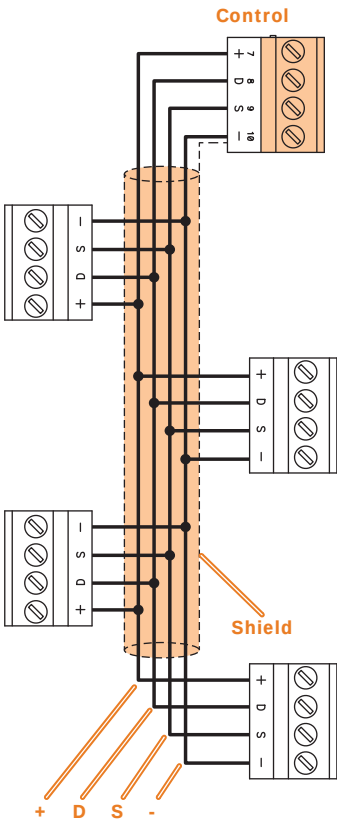

- Cable type
  The cable section used affects the dispersion of the conductor signals.

Table 3-1: Recommended cable

Cable AF CEI 20-22 II	n. wires	Section (mm^2)	I-BUS terminal
4 wire cable + shield	2	0.5	+ -
	2	0.22	D S
6 wire cable + shield	2	0.5	+ -
	2	0.22	D S
	2	0.22	available
6 wire cable + shield	2	0.75	+ -
	2	0.22	D S
	2	0.22	available

- Communication speed over the BUS
  This parameter can be changed using the Prime/Studio software (38.4, 125 or 250kbs).

Table 3-2: BUS sizing

BUS speed	Maximum admissible length of the BUS
38.4kbps	1000m
125kbps	700m
250kbps	300m

- Number and distribution of IB200 isolators.
  To increase the reliability and the extension of the BUS, it is necessary to use isolators.

For proper installation of the isolator, and therefore of the BUS, it is necessary to size the BUS branch in which the isolator is located based on the number of peripherals connected to the branch and their total current absorption. This absorption is therefore to be compared with the "Maximum absorption from the control panel" data.

Another feature is the length of the line that is downstream of the isolator up to the successive isolator or EOL. Following is a table with indicative values of the length depending on the BUS speed:

Table 3-3: Sizing of IB200 isolators

BUS speed	Cable length downstream of the isolator (L)	Maximum number of cascaded isolators
38.4kbps	500m	9
125kbps	350m	6
250kbps	200m	2

The lengths (L) shown here can be identified with:

- the length of the cables between an isolator and the successive peripherals or, in the case of a single line, between two successive isolators.
- the sum of the lengths of all the lines that start from an isolator and arrive at successive isolators or, in the case of branched lines, ending with peripherals.

For this purpose, we provide an example for a system with a BUS speed of 125kbps:

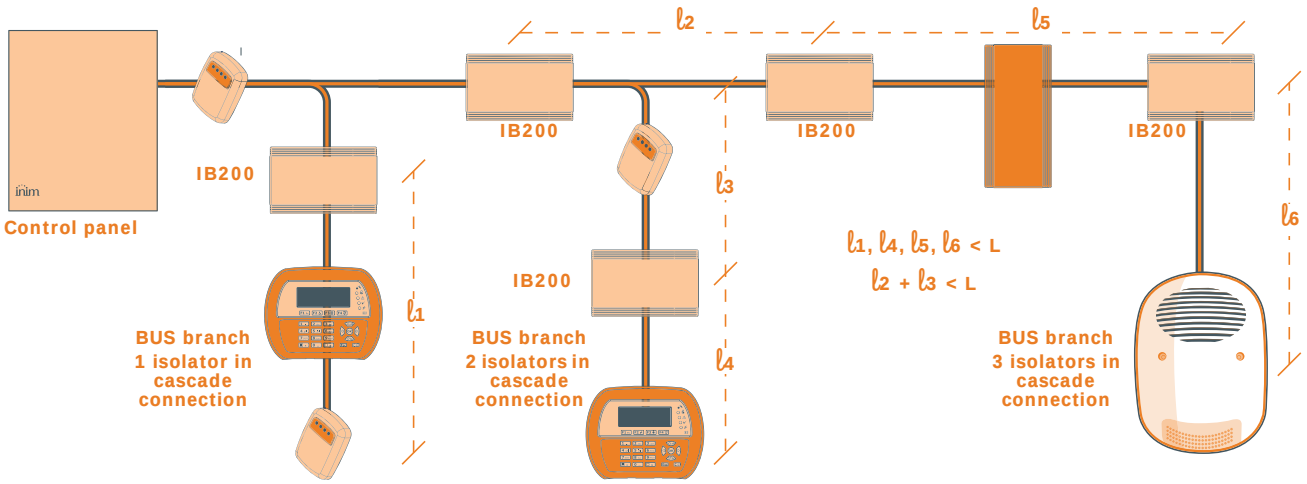

Note

The distances indicated in the tables are obtained under optimal wiring conditions and in respect of the points indicated above.

It is not recommended to position an isolator immediately after the control panel Each isolator should be positioned in the points where the quality of the BUS drops drastically.

Addressing the peripherals 3-3

In order to allow the control panel to identify the peripherals distinctly, you must assign a different address to each device. It is possible for two peripherals of different types to have the same address (for example address 3 for a Flex5 and also for a Joy keypad), while two peripherals of the same type must never have the same address.

Expansions address	DIP-switch 12345678
1	00000000
2	00000001
3	00000010
4	00000011
5	00000100
6	00000101
7	00000110
8	00000111
9	00001000
10	00001001
11	00001010
12	00001011
13	00001100
14	00001101
15	00001110
16	00001111
17	00010000
18	00010001
19	00010010
20	00010011
21	00010100
22	00010101
23	00010110
24	00010111
25	00011000
26	00011001
27	00011010
28	00011011
29	00011100
30	00011101
31	00011110
32	00011111
33	00100000
34	00100001
35	00100010
36	00100011
37	00100100
38	00100101
39	00100110
40	00100111

Table 3-4: Peripherals address

	Expansions and transceivers address	Red	Blue	Green	Yel-low	nBy/S BS200	nBy/X nBy/K
Prime120L, Prime240L and Prime500L	1	0	0	0	1	○○○●	◐
	2	0	0	1	0	○○●○	◒
	3	0	0	1	1	○○●●	◑
	4	0	1	0	0	○●○○	◔
	5	0	1	0	1	○●○●	◕
	6	0	1	1	0	○●●○	◔
	7	0	1	1	1	○●●●	◕
	8	1	0	0	0	●○○○	◔
	9	1	0	0	1	●○○●	◕
	10	1	0	1	0	●○●○	◔
	11	1	0	1	1	●○●●	◕
	12	1	1	0	0	●●○○	◔
	13	1	1	0	1	●●○●	◕
	14	1	1	1	0	●●●○	◔
	15	1	1	1	1	●●●●	●
Prime060S, Prime060L	16	0	0	0	L	○○○⊘	⊕
	17	0	0	L	0	○○⊘○	⊕
	18	0	0	L	L	○○⊘⊘	⊕
	19	0	L	0	0	○⊘○○	⊕
	20	0	L	0	L	○⊘○⊘	⊕
	21	0	L	L	0	○⊘⊘○	⊕
	22	0	L	L	L	○⊘⊘⊘	⊕
	23	L	0	0	0	⊘○○○	⊕
	24	L	0	0	L	⊘○○⊘	⊕
	25	L	0	L	0	⊘○⊘○	⊕
	26	L	0	L	L	⊘○⊘⊘	⊕
	27	L	L	0	0	⊘⊘○○	⊕
	28	L	L	0	L	⊘⊘○⊘	⊕
	29	L	L	L	0	⊘⊘⊘○	⊕
	30	L	L	L	L	⊘⊘⊘⊘	⊕

0	○	LED Off
1	●	LED On
L	⊘	Flashing LED

Depending on the type of control panel installed, each type of peripheral has a maximum number of addresses that must not be exceeded. The following table shows the available peripheral addresses and the maximum number of addresses allowed.

The first section on the table on the left shows the addresses available for the first 40 expansions, together with the DIP-switch configuration of the expansion board.

In the second section at the side of every nBy reader and transceiver address is the combination of the reader LEDs.

For addresses higher than those shown in the table and for the addressing procedures of individual devices, please refer to the respective manuals.

It is possible to connect only one Nexus device to Prime control panels, therefore, no addressing procedure is required.

3-3-1 Fast addressing of keypads and readers

If, within 4 seconds of inserting the maintenance jumper (*Table 2-6: Mother board - description of parts, I*) you press the open-tamper BUTTON on the control panel front plate (*Table 2-5: Control panels - description of parts, O*), the Prime system will activate the function for the fast addressing of keypads and readers.

All the keypads and readers connected to the I-BUS will be placed in address programming mode.

At this point, the installer can either change or confirm the assigned addresses.

3-4 Enrolling peripherals

Prime control panels allow the enrolling of peripherals in different ways, with a choice between automatic or manual procedures, depending on installer access to the system.

Automatic, from control panel in“service" mode

Placing the control panel in “maintenance” mode (refer to *paragraph 3-1-9 Maintenance status*) activates automatic enrolling of peripherals on the BUS at intervals of 10 seconds.

If the installer assigns addresses to peripherals connected to the BUS, at 10 second intervals, the control panel will enroll in the configuration the peripherals it finds.

Automatic, from keypad

Alternatively, it is also possible to start an automatic enrolling process by means of the following installer menu options:

`Type in Code` (Installer), `PROGRAMMING Default settings, Auto enrolPeriph`

Automatic, at first startup

The peripherals connected to the BUS are enrolled automatically at first start-up (see *Chapter 4, First power up*).

Manual, via software

Once the system solution that is to be applied to the system has been opened, click on the **System Layout** button in the menu on the left. Then in the section on the right click on the **Add device on BUS** button.

A window opens where you can select the devices to be configured and add them to the configuration.

Note

For the correct usability of the layout of a system that uses home-automation modules controlled via software, ensure you have reserved the number of terminals required for the selected operating mode.

In the section on the left you can increase the number using the button corresponding to the selected device type.

To remove a device from the structure, work through the Add device procedure, but instead deselect the device you want to remove

Alternatively, you can access the programming section by clicking on the relevant button on the menu on the left, and from the list that appears click on the **Delete** button that corresponds to the line of the device to be removed.

Manual, from keypad

The enrollment of addressed peripherals is possible by enabling the menu options after reaching the installer menu section:

`Type-in Code` (Installer), `PROGRAMMING` Type of peripheral, `Enable/Disable`

This section allows you to add/remove expansions from the configuration, by means of keys [■ *] and [□ #].

Note

The Self-balancing feature is a Registered patent.

Wiring and balancing alarm detectors 3-5

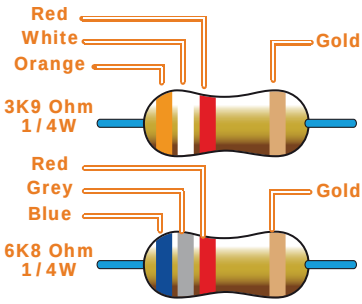

The wiring and respective balancing method depend on the type of detector you are installing, and the level of protection you wish to achieve. The detectors can be powered through:

- terminals [+AUX/12V] and [-/GND] on the control panel
- terminals [+AUX/12V] and [-/GND] on FLEX5 expansions
- terminal [+/12V] and terminals [-/GND] on keypads
- from any 12V ancillary source on condition that its GND reference is in common with that of the control panel.

The resistors used for balancing are:

- 3K9Ohm 1/4W
- 6K8Ohm 1/4W

ATTENTION!

The resistors used must be connected directly to the detector terminals, never to the terminals of the control panel or peripherals.

The following table indicates the protection level of each detector type and the balancing options provided by the control panel:

Table 3-5: Protection level

BALANCING	N.O.	N.C.	Single	Double	Double zone	Double zone with EOL
PIR or Dual technology	very low	low	medium	high	medium	high
Magnetic contact	very low	low	medium	/	medium	high

Note

Single balancing provides the same level of protection as Double balancing, when the tamper contact of the detector is connected to a balanced zone on the control panel.

N.C. / N.O. balancing 3-5-1

In cases of N.C. balancing (normally closed) and N.O. balancing (normally open), it is possible to detect two distinct zone conditions:

- stand-by
- alarm

For each of these, the control panel reads different resistance values on the terminal, shown below in Ohm.

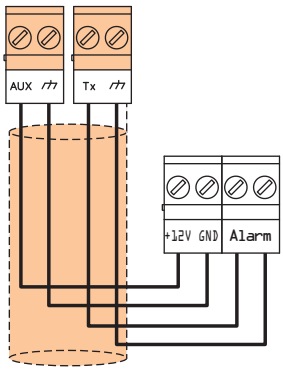

Ohm	N.C.	N.O.
> 2 x 3900 + 6800	alarm	stand-by
> 2 x 3900 + 6800	alarm	stand-by
3900 + 6800	alarm	alarm
2 x 3900	alarm	alarm
3900	stand-by	alarm
0	stand-by	alarm

If you wish the detector to signal tamper events, connect the detector “Tamper” terminal to a “24h” zone on the control panel.

3-5-2 Single balancing

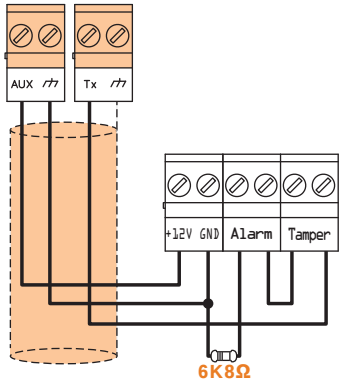

In the case of balancing with a single termination resistor, it is possible to detect 3 distinct conditions on the zone:

- stand-by
- alarm
- tamper (short-circuit)

For each of these, the control panel reads different resistance values on the terminal, shown below in Ohm.

Ohm	Zone
> 6800	alarm
6800	stand-by
0	tamper

If you wish the detector to signal tamper events, it is advisable to connect the "Tamper" terminal to a "24h" zone on the control panel.

3-5-3 Double balancing

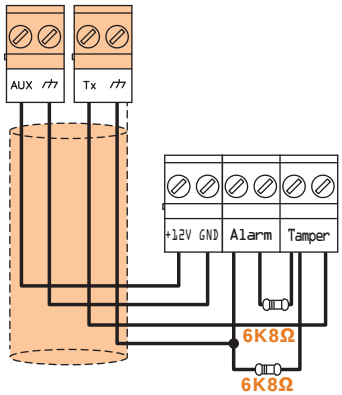

In the cases of balancing with double EOL resistor and customized balancing, it is possible to detect 4 distinct conditions:

- stand-by
- alarm
- tamper (short-circuit)
- tamper (wire cutting)

For each of these, the control panel reads different resistance values on the terminal, shown below in Ohm.

Ohm	Zone
> 6800	tamper (wire cutting)
6800	alarm
6800 / 2	stand-by
0	tamper (short-circuit)

3-5-4 Double-Zone balancing

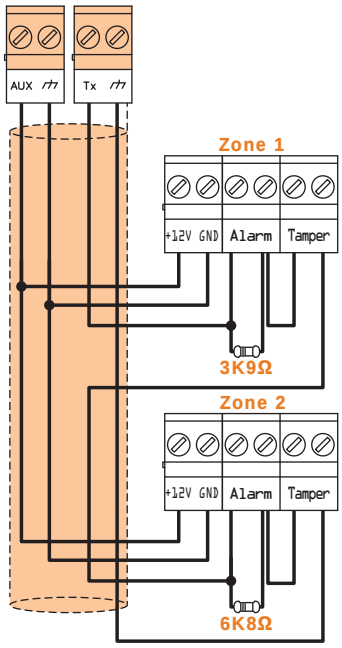

In the case of a double zone without an EOL resistor, it is possible to detect 5 distinct conditions for the entire terminal:

- stand-by on both zones
- alarm on zone 1 and stand-by on zone 2
- alarm on zone 2 and stand-by on zone 1
- alarm on both zones
- tamper (wire cutting)

For each of these, the control panel reads different resistance values on the terminal, shown below in Ohm.

Ohm	Zone 1	Zone 2 (double)
> 3900 + 6800	tamper	
3900 + 6800	alarm	alarm
6800	stand-by	alarm
3900	alarm	stand-by
0	stand-by	stand-by

Double Zone balancing with EOL 3-5-5

In the case of a double zone with an EOL resistor, 6 distinct conditions can be detected for the entire terminal:

- stand-by on both zones
- alarm on zone 1 and stand-by on zone 2
- alarm on zone 2 and stand-by on zone 1
- alarm on both zones
- tamper (wire cutting)
- tamper (short-circuit)

For each of these, the control panel reads different resistance values on the terminal, shown below in Ohm.

Ohm	Zone 1	Zone 2 (double)
> 2 x 3900 + 6800	tamper (wire cutting)	
> 2 x 3900 + 6800	alarm	alarm
3900 + 6800	stand-by	alarm
2 x 3900	alarm	stand-by
3900	stand-by	stand-by
0	tamper (short-circuit)	

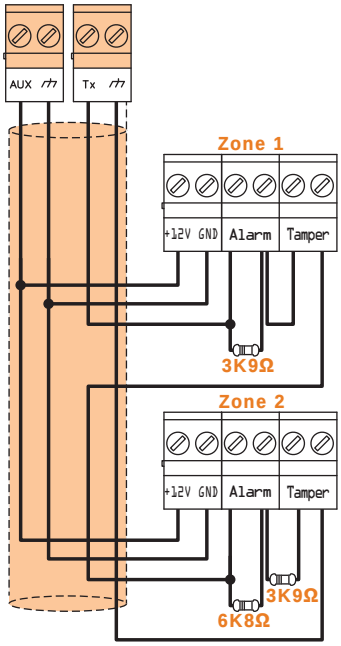

Connection and balancing of roller shutter / shock sensors 3-6

It is possible to choose between two types of balancing for roller shutter and shock sensors:

- normally closed (N.C.)
- single balancing (NC with EOL)

The following table compares the protection level of roller blind/shock sensors using the two balancing options provided by the control panel.

Table 3-6: Protection level

BALANCING	N.C.	Single balancing (N.C. with EOL)
Roller blind or Shock sensor	very low	high

If the roller-blind or shock sensor is connected to a terminal of a wireless device, the connection cable must be less than 2 meters long.

The roller-blind sensor must generate pulses with a length of between 500µsec and 10msec.

Normally closed (N.C.) 3-6-1

In this case, the alarm condition is revealed exclusively by the number of pulses (pulse count) the control panel detects on the terminal.

If this balancing method is applied, the control panel will be unable to detect tamper, wire-cutting or short-circuit.

The discriminated conditions are:

- stand-by
- alarm

The alarm condition is detected exclusively by the pulse count and sensitivity, in accordance with the programmed parameters (refer to the Programming manual, *paragraph 6-1 Zone/ Ingressi*, *Detector type*).

3-6-2 Single balancing (N.C. with EOL)

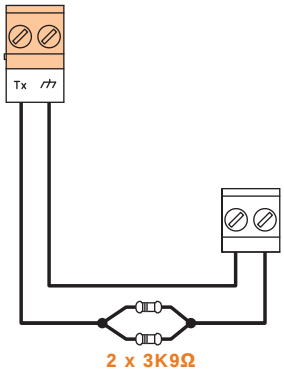

In this case, the discriminated conditions are:

- stand-by
- alarm
- tamper (wire cutting)
- tamper (short-circuit)

For each of these, the control panel reads different resistance values on the terminal, shown below in Ohm.

Ohm	Zone
> 3900 / 2	tamper (wire cutting)
3900 / 2	stand-by
0	tamper (short-circuit)

The alarm condition is detected exclusively by the pulse count and sensitivity, in accordance with the programmed parameters (refer to the Programming manual *paragraph 6-1 Zone/ Ingressi*, *Roller-blind/Shock*).

3-7 Learn zone balancing

After connecting and balancing all the zones, the installer can start the auto-enrolling phase of balancing value, thus avoiding the manual setting of each individual balancing value (refer to the Programming manual, *Chapter 17*, *Parametri di fabbrica*, Learn zone bal.).

Note

The Self-balancing feature is a Registered patent.

3-8 Connecting outputs

In correspondence with any event recognized by the control panel it is possible to activate one (or more outputs).

For the connection of the outputs to terminals **T1** and **T2** of the Air2-MC300 device, refer to the Installation Manual supplied with the Air2-BS200.

3-8-1 Connecting sounders / flashers

In the event of an intrusion alarm, the control panel will activate the output which is connected to the audible/visual signalling devices. The most commonly used alarm output to drive a self-powered sounder/flasher is the relay output on board the control panel.

The following wiring diagram shows the connection of a self-powered sounder/flasher (in this case the IVY sounder/flasher manufactured by INIM) and an indoor sounder/flasher.

3-8-2 Connection of open-collector outputs

With the exception of the relay output, all the control panel and Flex5/P and Flex5/U outputs are "open collector" outputs:

- **OC1** and **OC2** are open collector outputs capable of driving maximum currents in accordance with the *Table 2-1: Control panels - electrical and mechanical features*.
- All the terminals configurable as outputs are open-collector outputs capable of driving a maximum current of 150mA.

Following you will find examples of typical connections for the activation of a load when closing to ground (⏚) a Normally Open output.

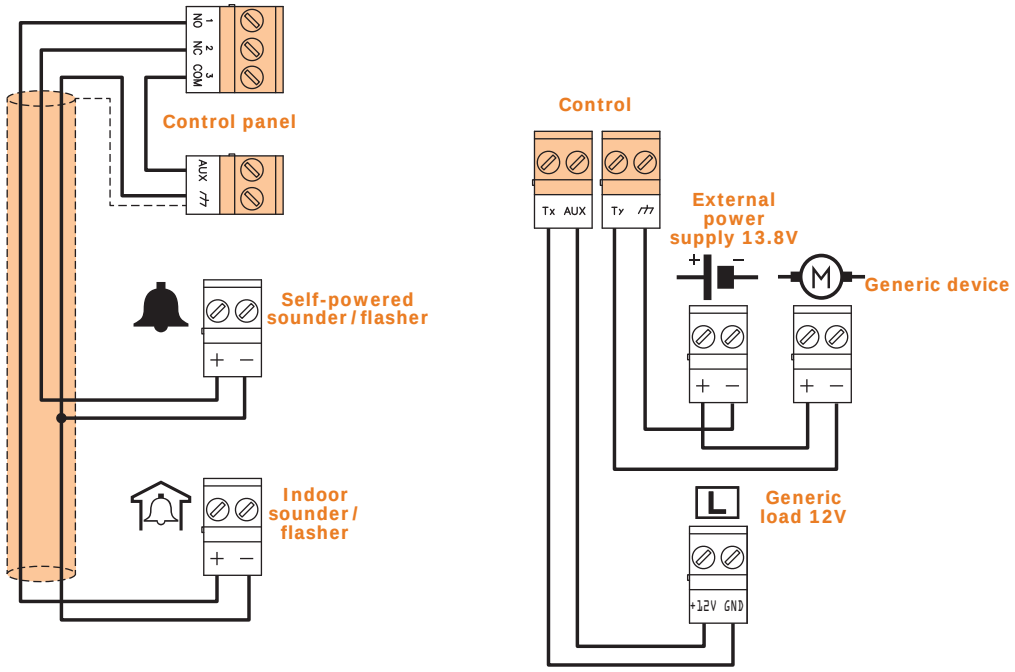
NO 1
NC 2
COM 3
Control panel
AUX
Self-powered sounder / flasher
Indoor sounder / flasher
Control
Tx AUX
Ty
External power supply 13.8V
Generic device
Generic load 12V
+12V GND

Chapter 4 First power up

On first power up, the control panel initializes the parameters at default (factory settings).

In addition, the control panel automatically enrolls in the configuration all the peripherals it "finds" on the I-BUS (automatic addressing phase).

At the factory, all expansions, keypads and readers are configured at address 1, if a system is equipped with more than one peripheral of each type, it is evident that on first power-up auto-enrolling will not be successful.

In order to allow the system to perform an accurate auto-enrolling operation on "First power-up", work carefully through the following steps.

ATTENTION!

When wiring the system, ensure that no power from the mains (230V~) or backup battery reaches the control panel or any of its peripherals.

1. Attach the control panel to the wall.
2. Complete the wiring of the peripherals to the BUS.
3. Connect the BUS wires to the control panel.
4. Complete the wiring and balancing of the system detectors.
5. Connect the detectors to the terminals.
6. Connect the outputs to the control panel and peripheral terminals.
7. Connect the control panel to the telephone line.
8. Connect the SmartLogos30M board to the appropriate connector on the control panel motherboard.
9. Insert the maintenance jumper in the "SERV" position.
10. Connect the primary power source (230V~).
11. Connect the buffer battery and the thermal probe.
    The first line of the display of each keypad in the system will show the 'Maintenance' message and the keypad address at default. On first power up (first startup), all the keypads will show "K01" (refer to *paragraph 3-1-9 Maintenance status*).

Note

If several keypads are connected to the I-BUS, their displays may be blank. If this occurs, disregard this aspect and go directly to the next step.

12. Address the peripherals (refer to *paragraph 3-3 Addressing the peripherals*). At least one keypad must be assigned to address 1. Using keypad 1, initialize the addressing phase for nBy readers.
13. From the installer menu, start the self-enrolling process of zone balancing (refer to the Programming manual, *Chapter 17, Default settings*, *Learn zone bal.*).

ATTENTION!

During this phase it is essential that all partitions are at in stand-by status.

14. If present, specify the expansion terminals simulated by the Air2-BS200 transceiver as "Wireless" terminals (refer to the Programming manual, *Chapter 6, Programming terminals*)
15. If the installation requires the use of a telephone communicator, program the telephone numbers for the voice and digital dialer (refer to the Programming manual, *Chapter 11, Programming the phone*).
16. Remove the maintenance jumper from the "SERV" position and place it in the "RUN" position.

First operational test

Chapter 5

A procedure is provided for an operational test on the Prime system after installation. The test consists in the violation of a "Delayed" type zone.

This procedure must be carried out only after the complete installation of the Prime control panel and of all the components that make up the entire installation. To do this it is advisable to follow the instructions provided in *Chapter 4, First power up*.

1. Make sure all partitions are in stand-by status.
   This status is signalled on the blue LED on the keypad or the blue icon on the Alien keypad when the latter is ON solid.
2. Enter the control panel programming phase and program the partition you intend to violate.

✓

Via software

To program the zone to be tested, click on the **System Layout** button on the menu on the left. A graphic representation of the control panel board and a list of configured peripherals is available in the section on the right (refer to the software manual, *paragraph 5-2 Preparing a system layout*).

By double clicking on the terminal concerned you will enter the terminal programming phase. Set "Delayed" as the "Type".

Via keypad

`Type in Code` (Installer), `PROGRAMMING Terminals`, select the terminal concerned

or

`Type-in Code` (Installer), `PROGRAMMING Zones`, select the zone associated with the terminal concerned

Once the section has been accessed, set the "Type" as "Delayed".

```
Terminal xyz
Description
Partitions
Type
```

3. Set up the telephone dialer to provide voice signalling of violation.

Via software

To program voice signalling via the telephone communicator, click on the **Telephone** button in the menu on the left to display a list of available numbers in the section on the right.

By selecting the telephone number "1" from the list, you can modify the parameters. In this case it is necessary to enter the number to call and set the "Type" as "Voice".

Via keypad

`Type in Code` (Installer), `PROGRAMMING Telephone`, `Selected number`, `"NUMBER 001"`.

Once in this section it is necessary to enter the number to call and set the "Type" as "Voice".

```
NUMBER 001
Number
Description
Type
```

4. Exit the programming phase and carry out an Away Arming operation.
   If the default programming has not been changed, it can be carried out as follows:

Via keypad

Activate the "Arm/Disarm" shortcut (shortcut no. 1) associated with the F1 Fn button shown on the display.

Via Alien interface

Press the **Scenarios** button. This section provides a list of the scenarios which can be activated by means of the **ACTIVATE** button.

5. Wait until the "Exit Time" expires (30 seconds by default).
   The keypads will emit a series of pulses (3 pulses + 5-second pause, 4 short pulses + 5-second pause during the last 20 seconds of the exit time).
6. Violate the programmed zone.

ENTRY TIME

7. Being a "Delayed" type zone, the "Entry Time" will begin (30 seconds by default).
   The keypads will emit a series of pulses (8 pulses + 5 second pause).

TEST ALARM SIGNALLING

8. If the Arming scenario is still active when the entry time expires, alarm signalling will trigger:

- The visual and audible alarm signals will activate
- The red LED on the keypad or the red icon on the Alien interface will blink rapidly

DIALER TEST

9. The control panel will carry out signalling by means of a voice call to the programmed number.

10. Perform a disarm partitions operation. This operation also stops any alarms.
    If the default programming has not been changed, it can be carried out as described below, following entry of the user code:

Via keypad

Activate the shortcut associated with F2 button shown on the display. The shortcut will carry out a "Disarm" operation.

Via Alien interface

Press the **Scenarios** button. This section provides a list of the scenarios, activate scenario 2 "Disarm" by pressing the **ACTIVATE** button.

11. Delete alarm memories.
    If the default programming has not been changed, it can be carried out as described below, following entry of the user code:

Via keypad

Activate the "Delete memory" shortcut (shortcut no. 4) associated with the F4 button shown on the display.

Via Alien interface

Press the **Menu** button, access the "Actions" section then press the **ON** button that corresponds to the "Delete alarm memory" command.

Performing all the phases described above on a regular basis without problems is sufficient to confirm proper functioning and correct basic programming of the control panel.

Evolving Security

ISO 9001 Quality Management
certified by BSI with certificate number FM530352

Inim Electronics S.r.l.

Centobuchi, via Dei Lavoratori 10
63076 Monteprandone (AP), Italy
Tel. +39 0735 705007 _ Fax +39 0735 704912

info@inim.biz _ www.inim.biz

DCMIINE0PRIMEE-151-20210210